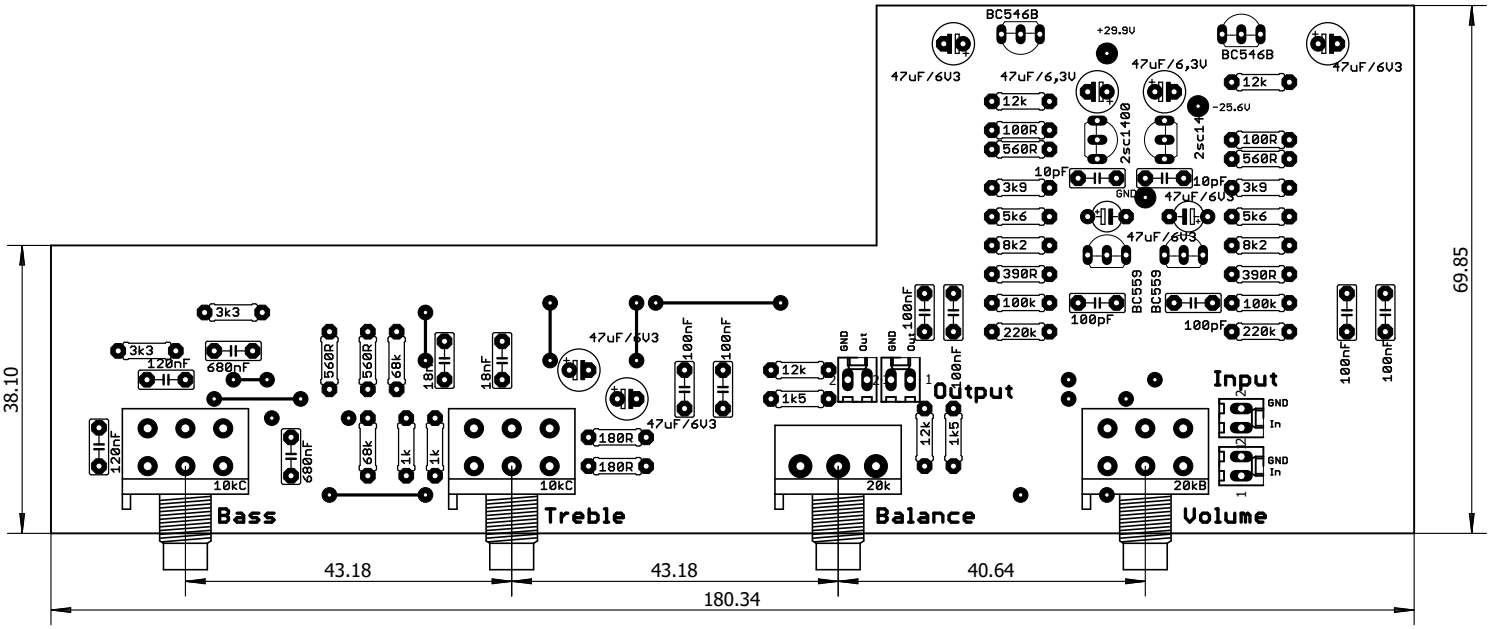
BC546B
+29.9V
47uF/6V3
47uF/6,3V
BC546B
47uF/6V3
12k
-25.6V
100R
560R
2sc1400
2sc1400
10pF
10pF
3k9
GND
47uF/6V3
5k6
47uF/6V3
8k2
390R
BC559
BC559
100k
100pF
100pF
220k
100nF
100nF
69.85
38.10
3k3
3k3
120nF
680nF
560R
560R
68k
18nF
18nF
47uF/6V3
100nF
100nF
12k
1k5
GND
Out
GND
Out
100nF
100nF
Output
Input
GND
In
GND
In
120nF
680nF
68k
1k
1k
180R
180R
47uF/6V3
12k
1k5
10kC
10kC
20k
20kB
Bass
Treble
Balance
Volume
43.18
43.18
40.64
180.34