Power Amplifier

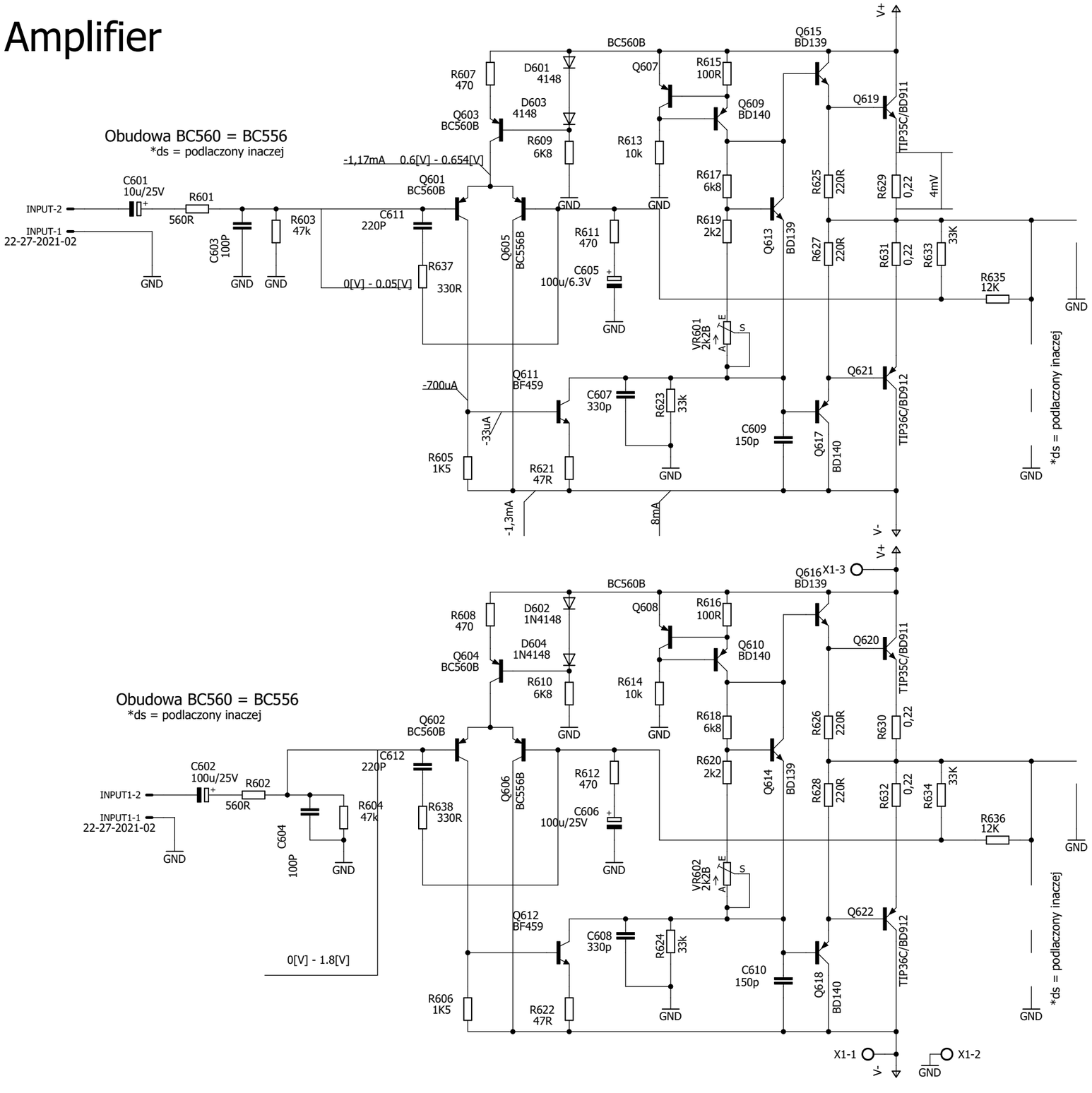

ROTEL-RA02	
not saved!	
Sheet: 1/2	